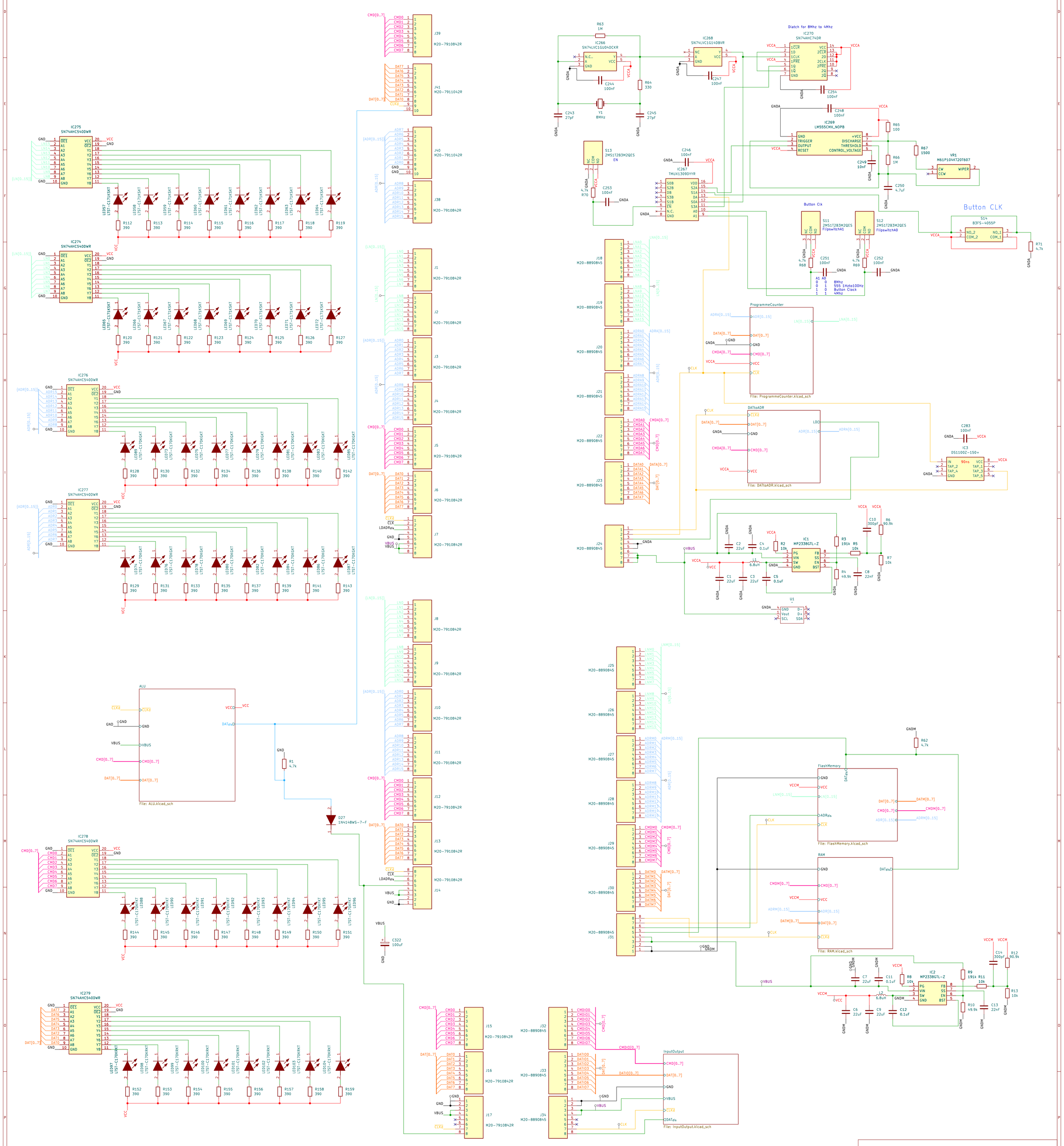
IC275 SN74AHC540DWR
IC274 SN74AHC540DWR
IC276 SN74AHC540DWR
IC277 SN74AHC540DWR
IC278 SN74AHC540DWR
IC279 SN74AHC540DWR
ALU
File: ALU.kicad_sch
IC266 SN74LVC1GU04DCKR
IC268 SN74LVC1G14DBVR
IC270 SN74AHC74DR
Diatch for 8Mhz to 4Mhz
IC269 LM555CMX_NOPB
IC267 TMUX1309DYYR
S13 2MS1T2B3M2QES EN
S11 2MS1T2B3M2QES FlipswitchA1
S12 2MS1T2B3M2QES FlipswitchA0
Button Clk
Button CLK
S14 B3FS-4055P
VR1 M61P104KT20T607
ProgrammeCounter
File: ProgrammeCounter.kicad_sch
DATtoADR
File: DATtoADR.kicad_sch
IC3 DS1100Z-150+
IC1 MP2338GTL-Z
U1
FlashMemory
File: FlashMemory.kicad_sch
RAM
File: RAM.kicad_sch
IC2 MP2338GTL-Z
InputOutput
File: InputOutput.kicad_sch
Sheet: /
File: Computer.kicad_sch
Title:
Size: A1
Date:
Rev:
KiCad E.D.A. 9.0.5
Id: 1/20

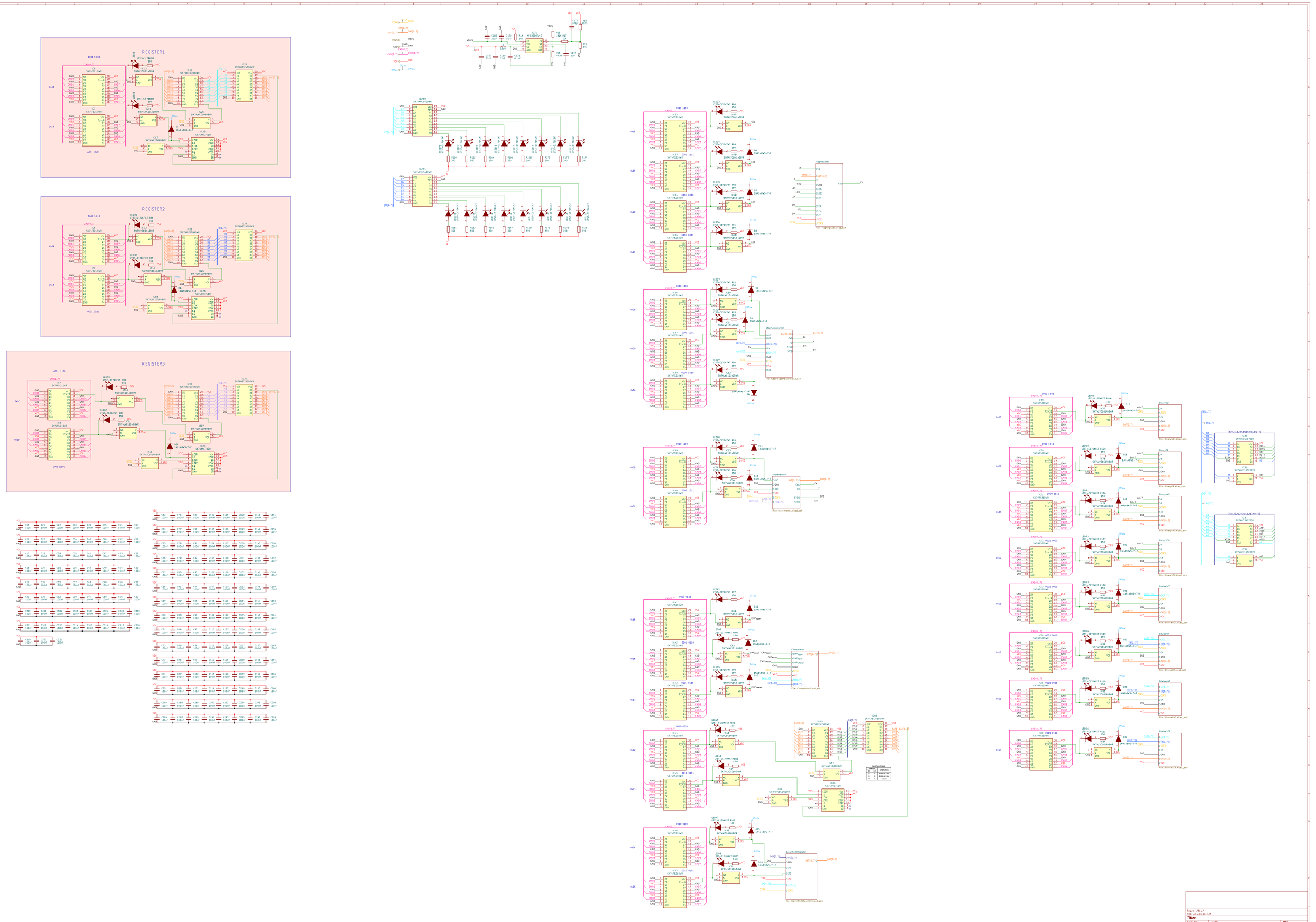
REGISTER1
REGISTER2
REGISTER3
FlagRegister
AdderSubstractor
Incrementor
BinaryNOT
BinaryOR
BinaryAND
BinaryXOR
BlueNOT
BlueOR
BlueAND
BlueXOR
Comparator
BarrelShiftRegister
Sheet: /ALU/
File: ALU.kicad_sch
Title:
Size: A2
Date:
Rev:
KiCad 5.0.4, 9.0.5

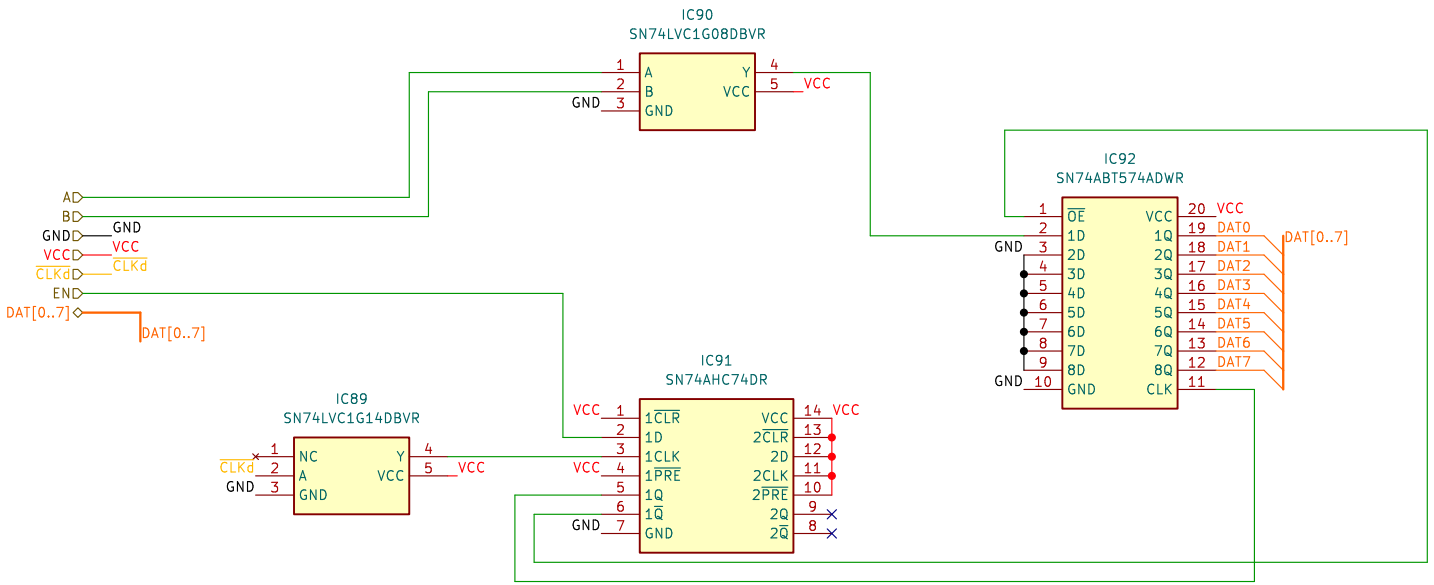

Sheet: /ALU/BinaryAND/
File: BinaryAND.kicad_sch

Title:

Size: A4	Date:	Rev:
KiCad E.D.A. 9.0.5		Id: 3/20

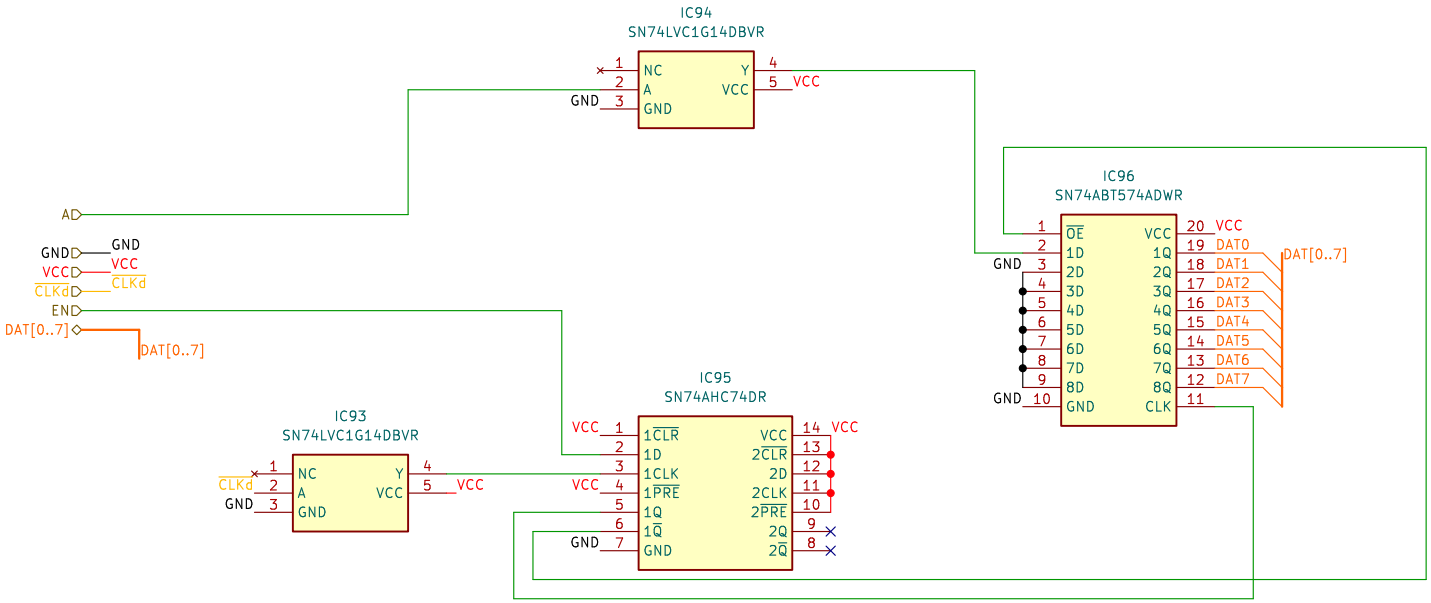

Sheet: /ALU/BinaryNOT/
File: BinaryNOT.kicad_sch

Title:

Size: A4	Date:	**Rev:**
KiCad E.D.A. 9.0.5		Id: 4/20

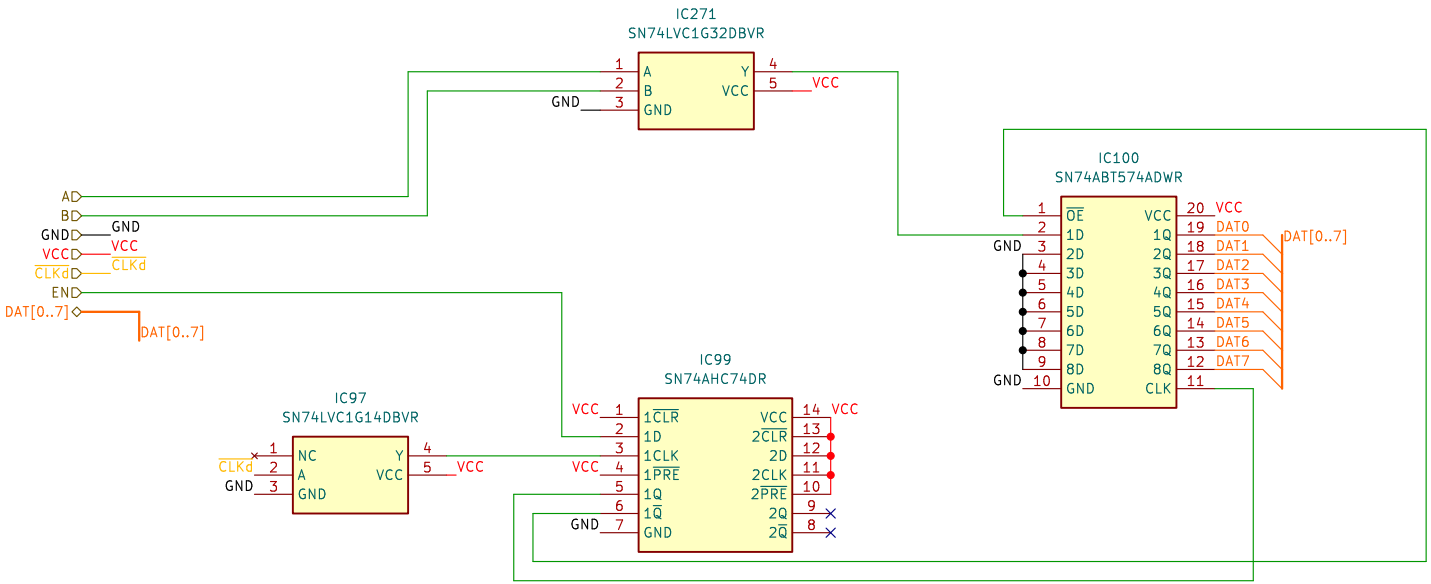

Sheet: /ALU/BinaryOR/
File: BinaryOR.kicad_sch

Title:

Size: A4	Date:	Rev:
KiCad E.D.A. 9.0.5		Id: 5/20

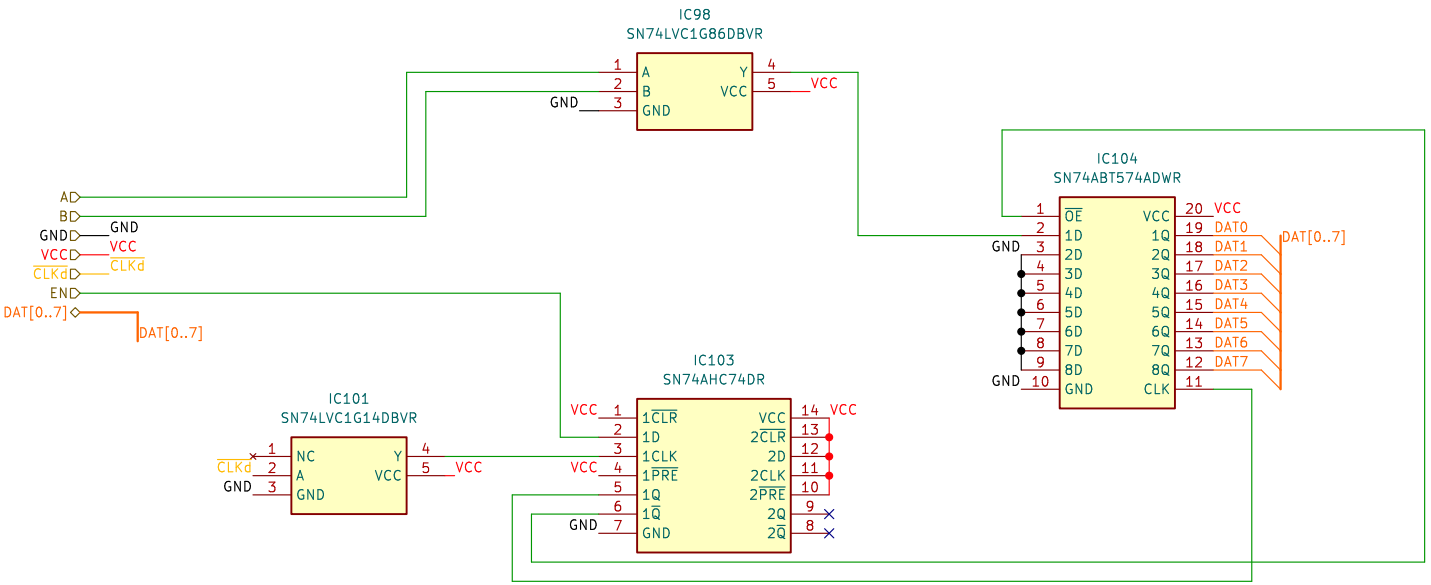

Sheet: /ALU/BinaryXOR/
File: BinaryXOR.kicad_sch

Title:

Size: A4	Date:	Rev:
KiCad E.D.A. 9.0.5		Id: 6/20

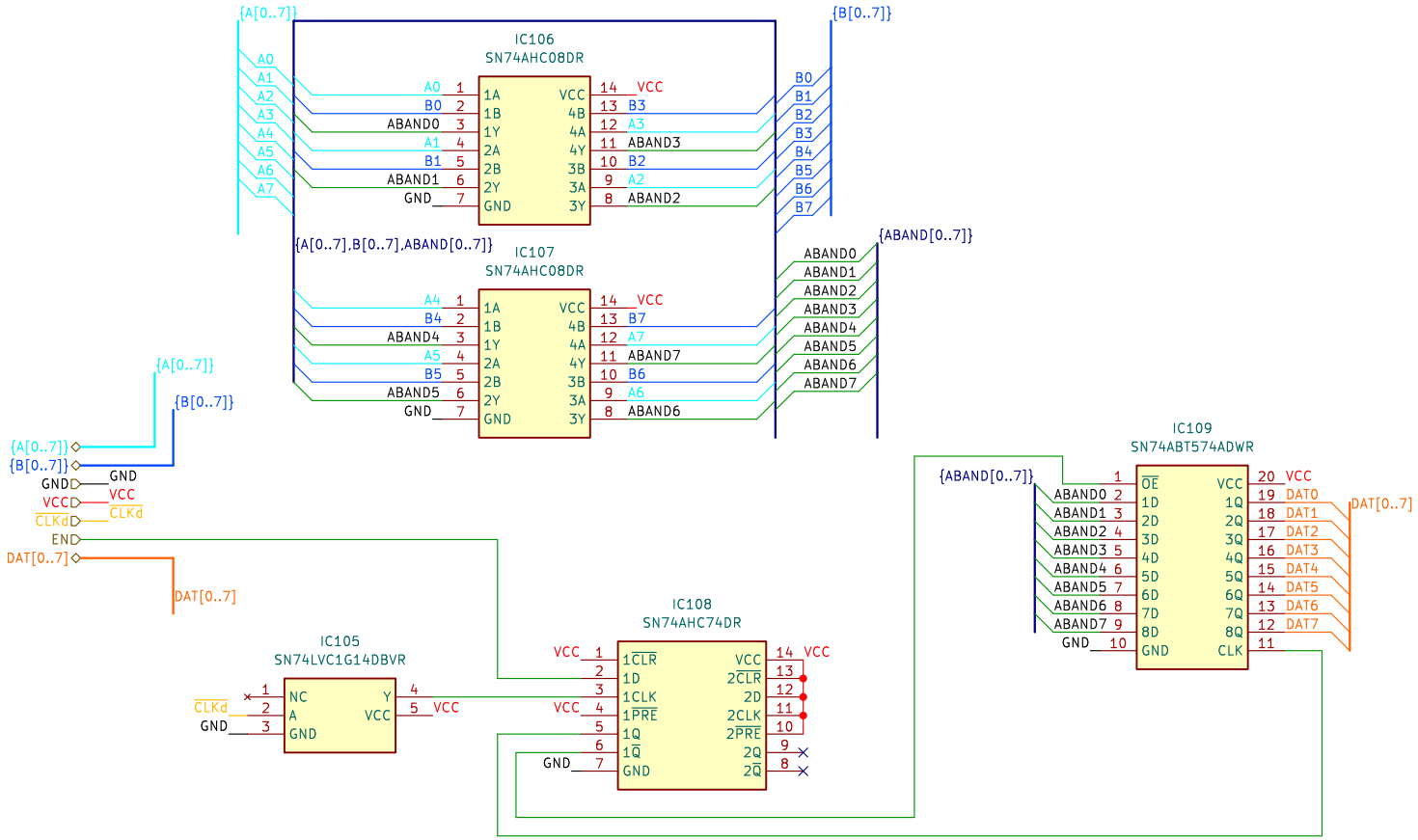

Sheet: /ALU/BitwiseAND/
File: BitwiseAND.kicad_sch

Title:

Size: A4	Date:	Rev:
KiCad E.D.A. 9.0.5		Id: 7/20

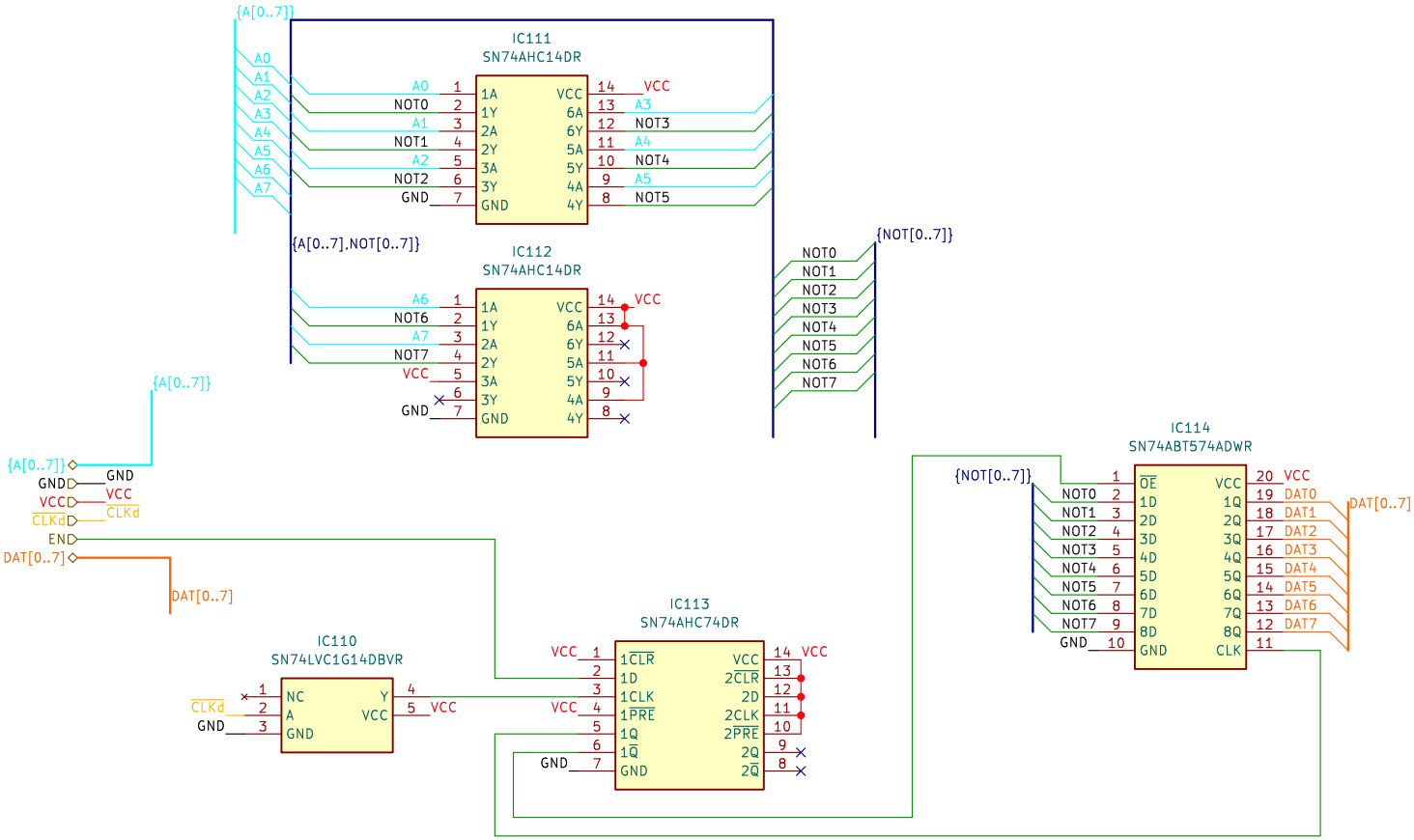

Sheet: /ALU/BitwiseNOT/
File: BitwiseNOT.kicad_sch

Title:

Size: A4	Date:	Rev:
KiCad E.D.A. 9.0.5		Id: 8/20

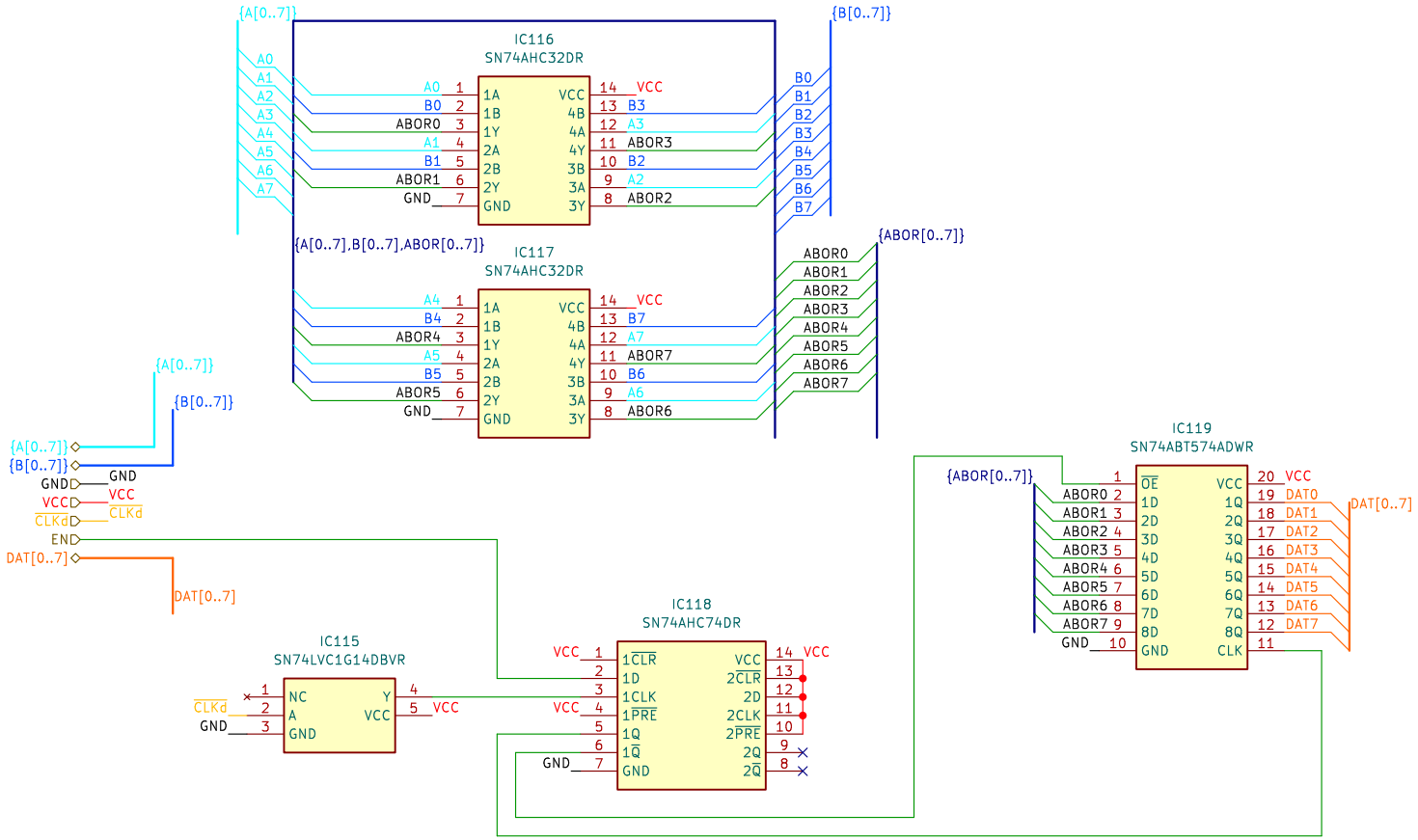

Sheet: /ALU/BitwiseOR/
File: BitwiseOR.kicad_sch

Title:

Size: A4	Date:	Rev:
KiCad E.D.A. 9.0.5		Id: 9/20

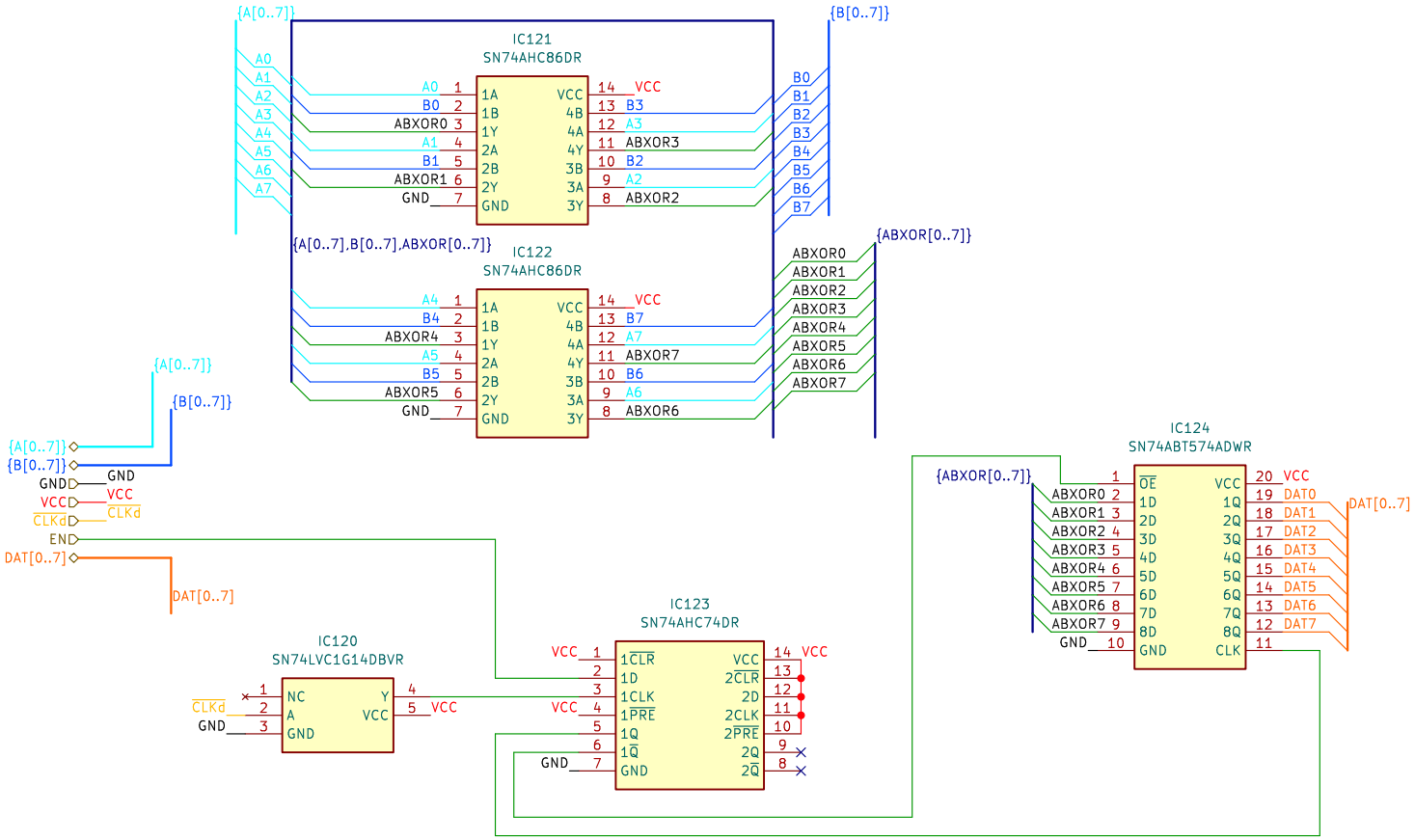

Sheet: /ALU/BitwiseXOR/
File: BitwiseXOR.kicad_sch

Title:

Size: A4	Date:	**Rev:**
KiCad E.D.A. 9.0.5		Id: 10/20

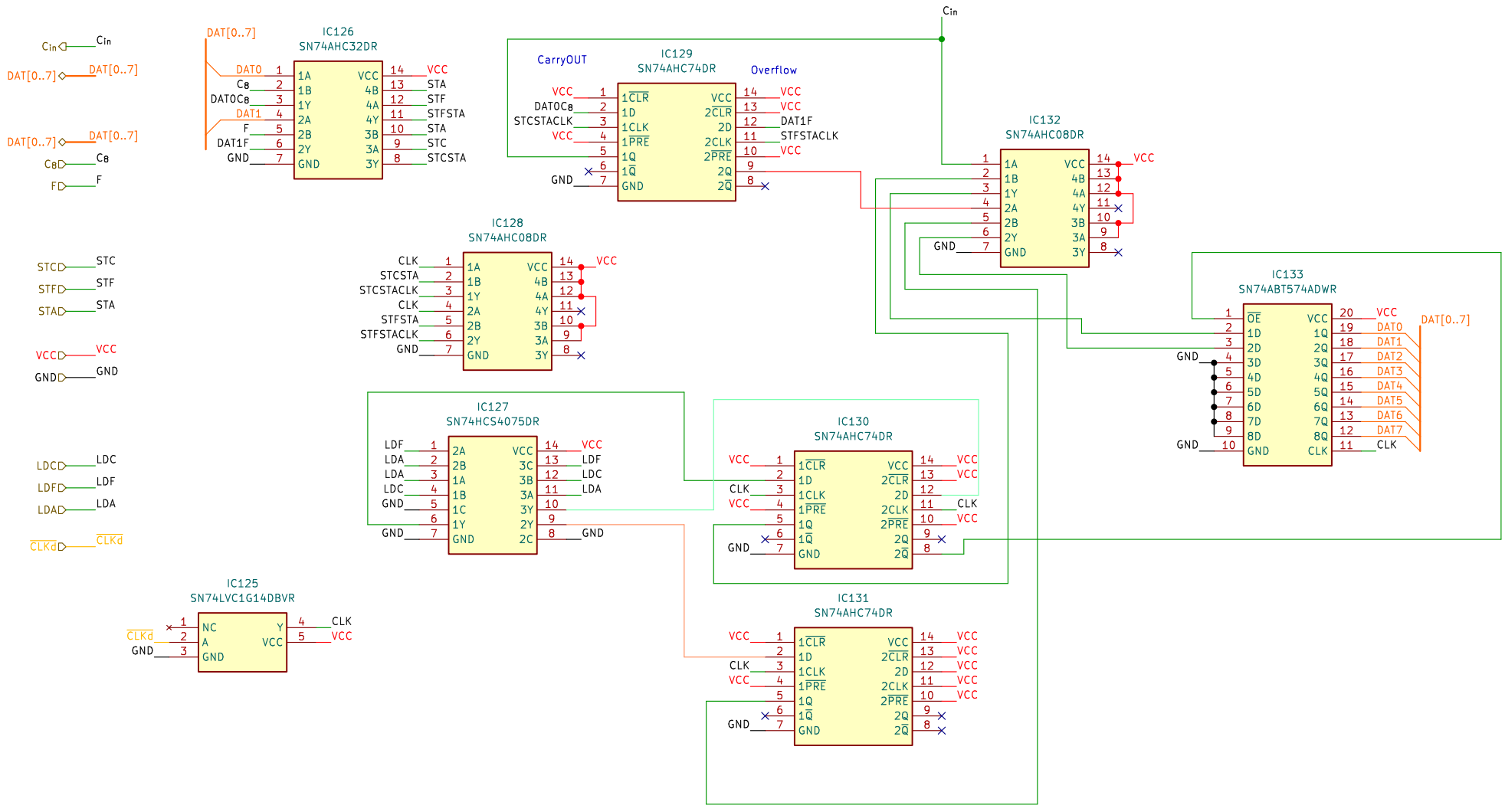

Sheet: /ALU/FlagRegister/
File: FlagRegister.kicad_sch

Title:

Size: A4	Date:	Rev:
KiCad E.D.A. 9.0.5		Id: 11/20

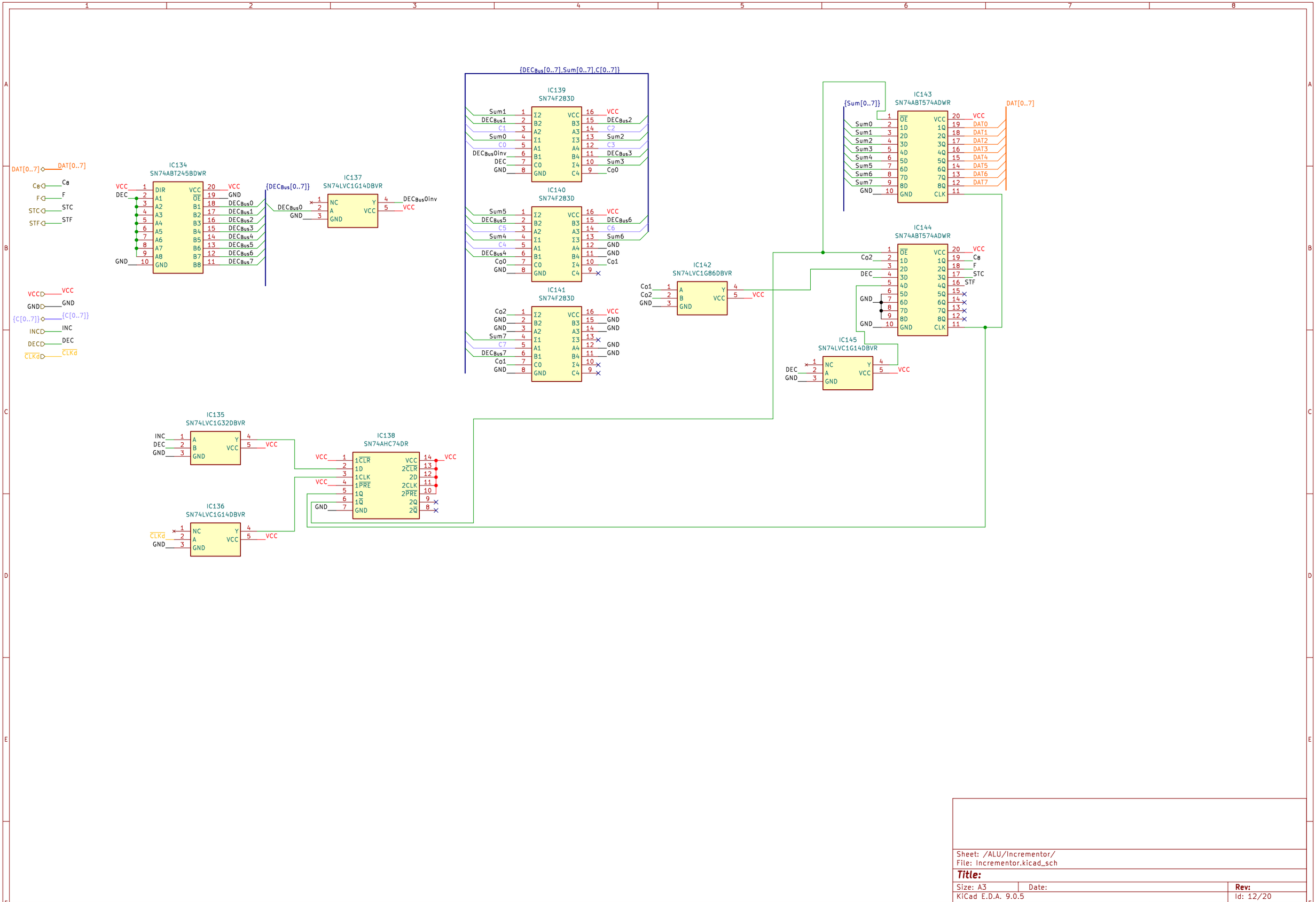

Sheet: /ALU/Incrementor/
File: Incrementor.kicad_sch

Title:

Size: A3	Date:	Rev:
KiCad E.D.A. 9.0.5		Id: 12/20

Q to a 2-input NAND gate.

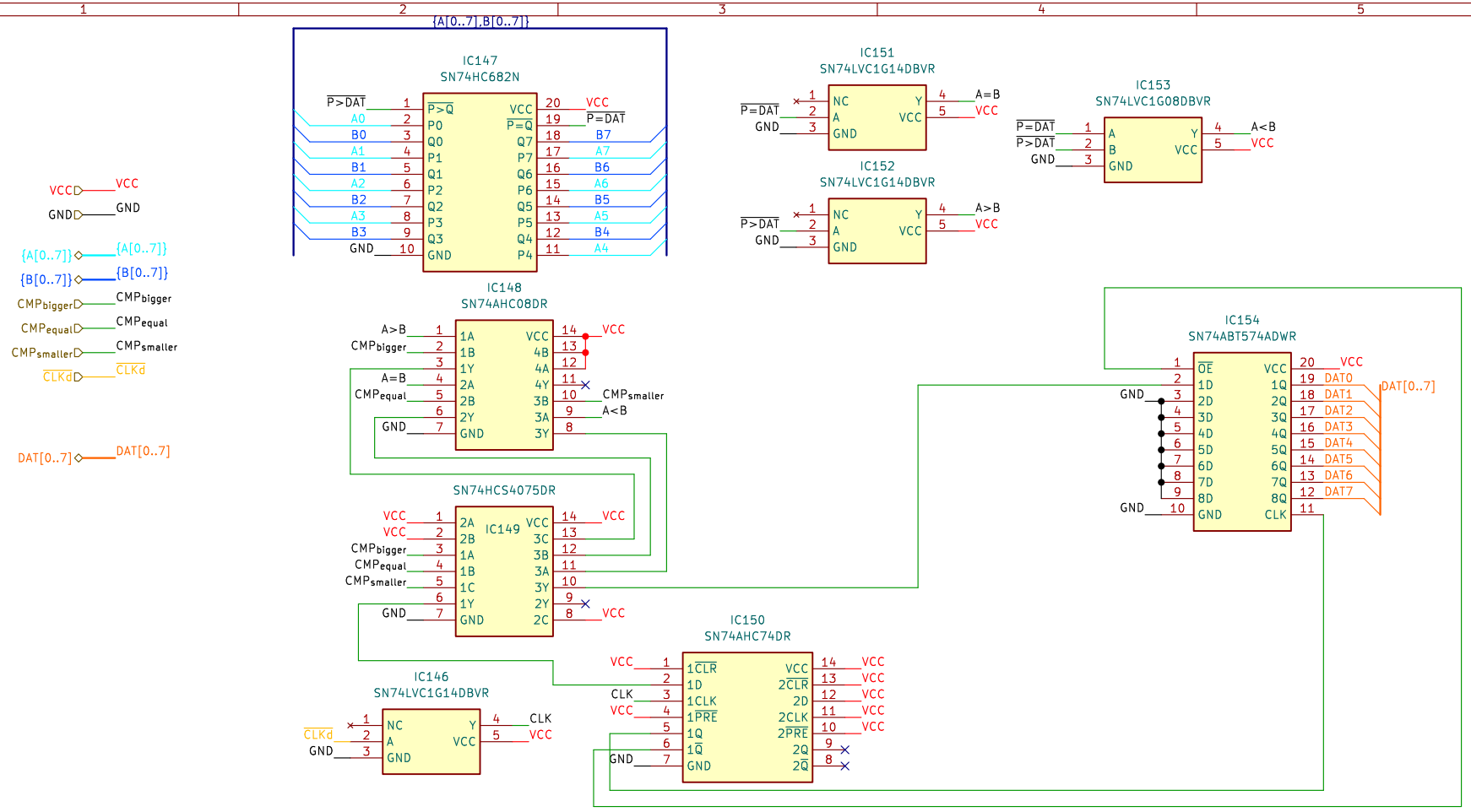

Sheet: /ALU/Comparator/
File: Comparator.kicad_sch

Title:

Size: A4	Date:	Rev:
KiCad E.D.A. 9.0.5		Id: 13/20

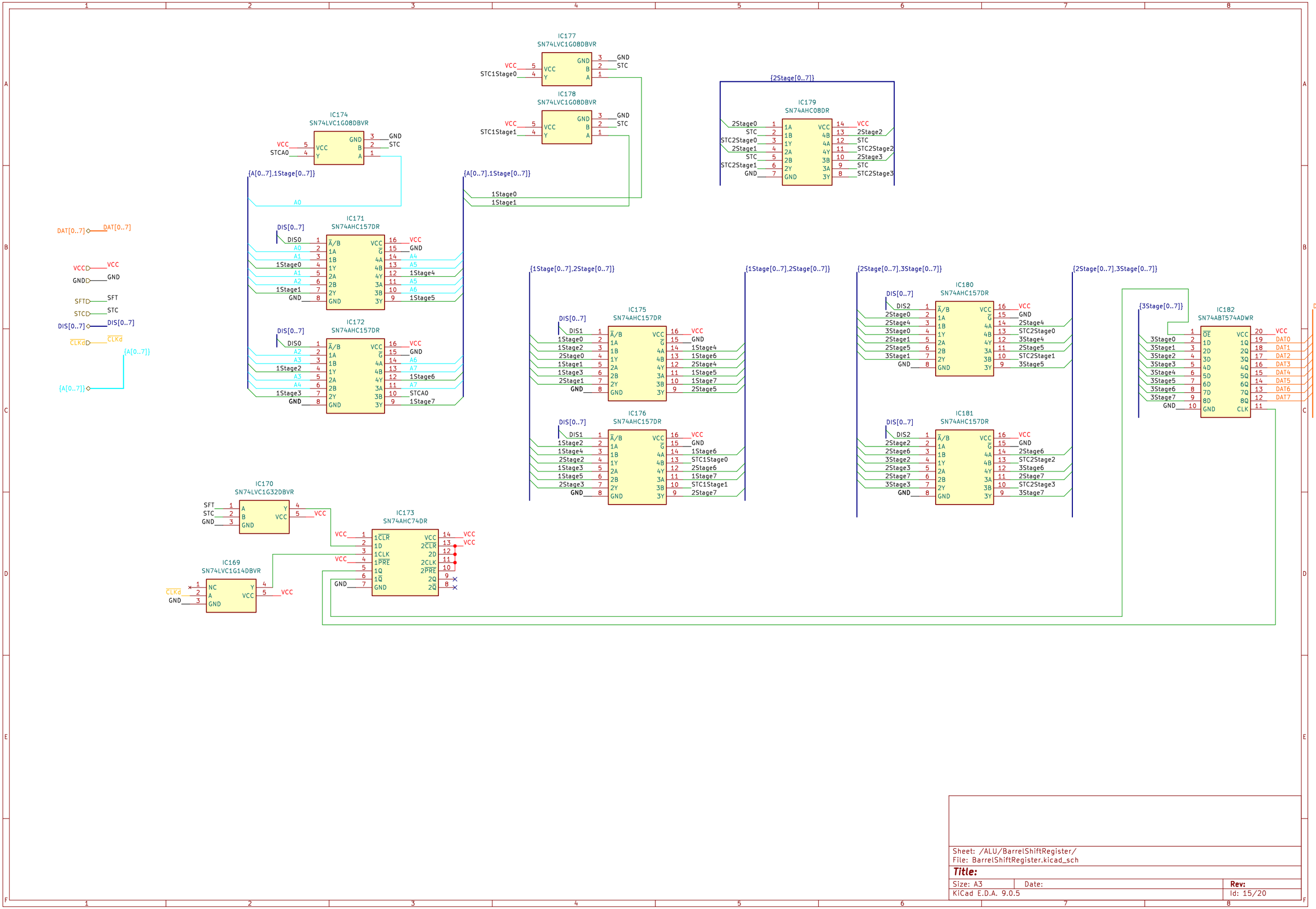

Sheet: /ALU/BarrelShiftRegister/
File: BarrelShiftRegister.kicad_sch

Title:

Size: A3	Date:	Rev:
KiCad E.D.A. 9.0.5		Id: 15/20

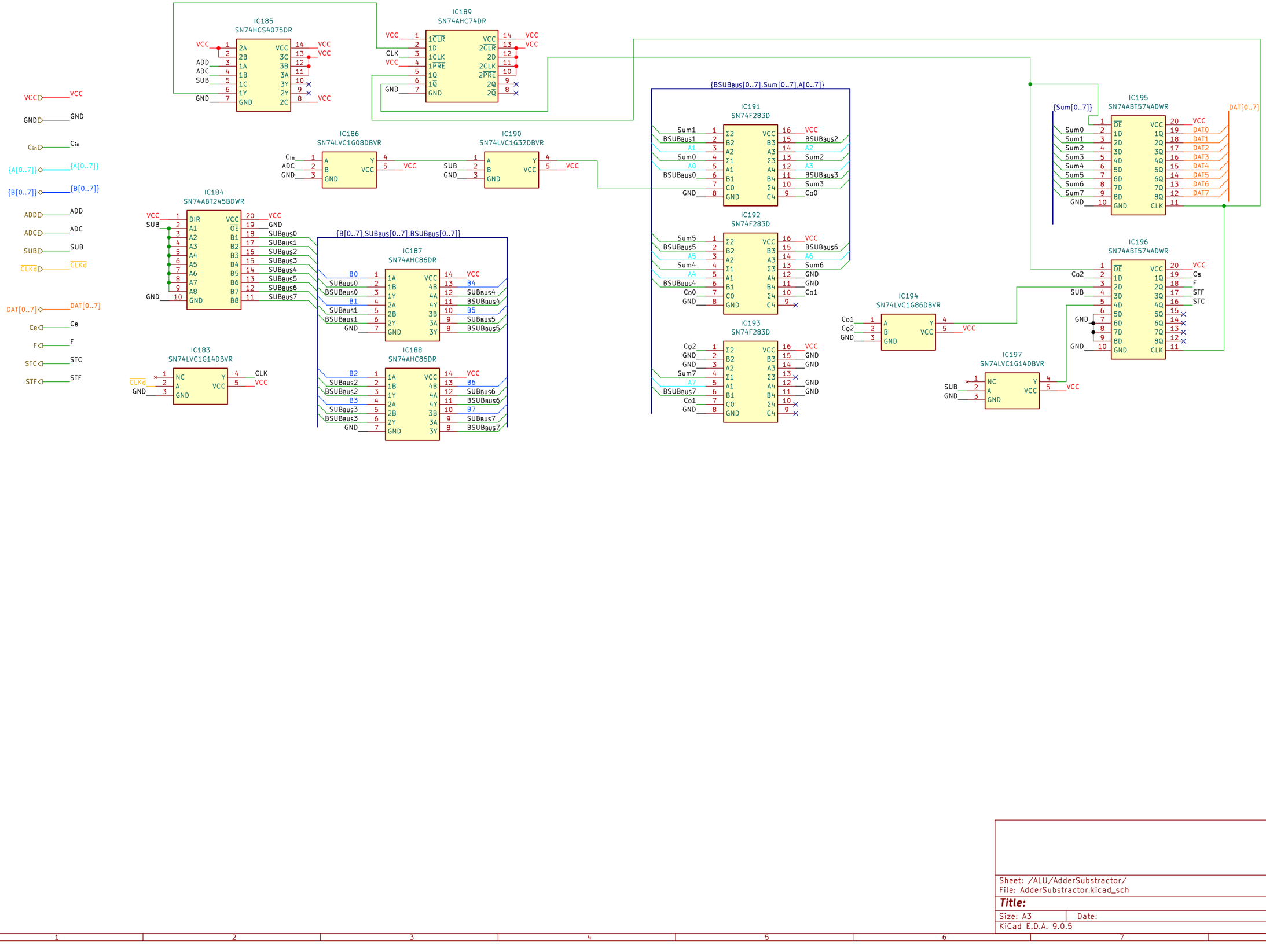

Sheet: /ALU/AdderSubstractor/
File: AdderSubstractor.kicad_sch

Title:

Size: A3	Date:	Rev:
KiCad E.D.A. 9.0.5		Id: 16/20

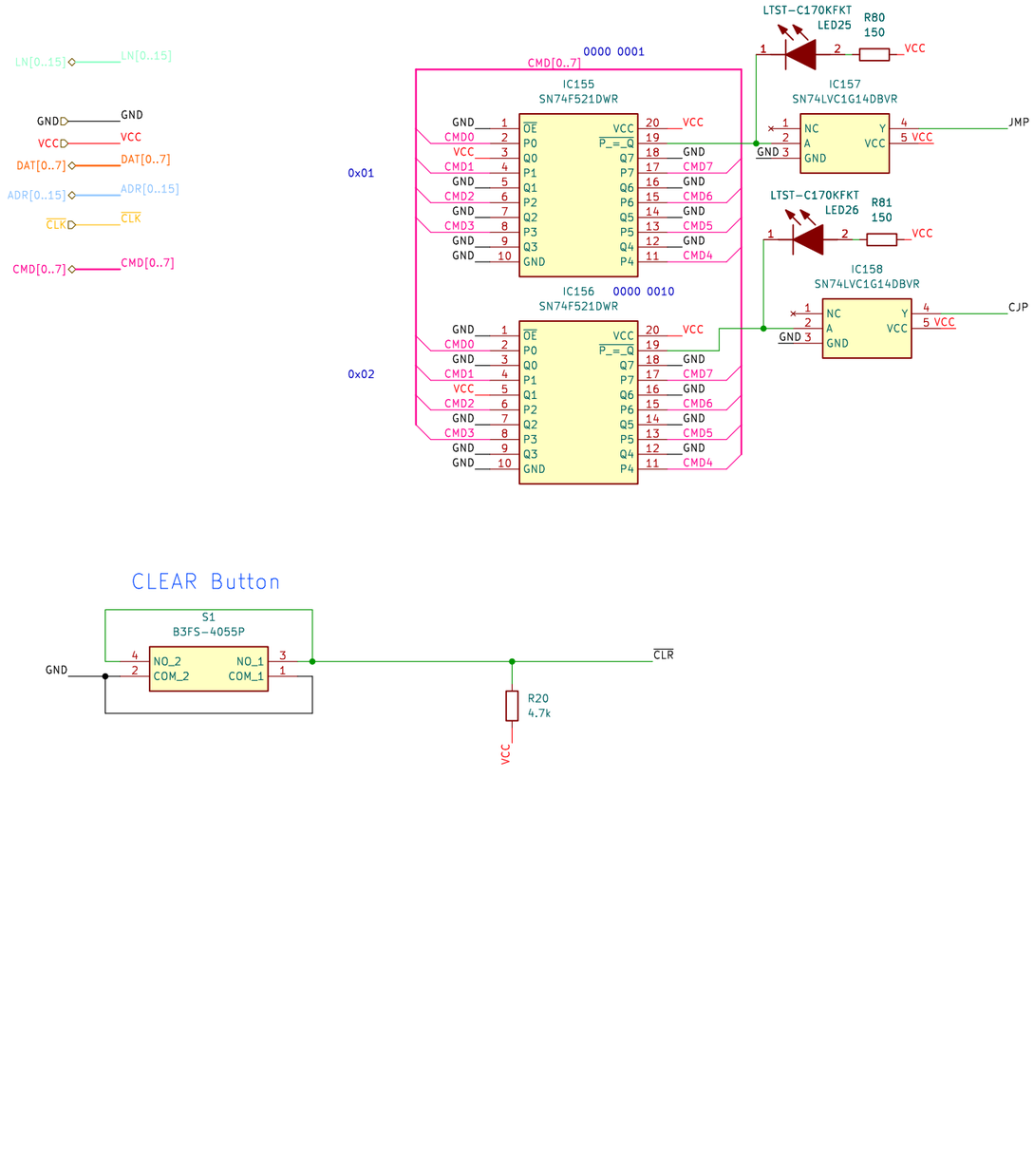

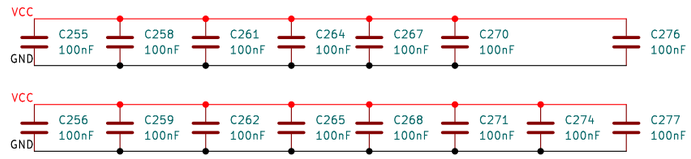

FUNCTION TABLE

INPUTS				ACTION ON THE RISING CLOCK EDGE(S)
$\overline{SR}$	$\overline{PE}$	CET	CEP	
L	X	X	X	Reset (clear)
H	L	X	X	Load ($P_n \rightarrow Q_n$)
H	H	H	H	Count (incremental)
H	H	L	X	No change (hold)
H	H	X	L	No change (hold)

H = High logic level, L = Low logic level, X = Don't care

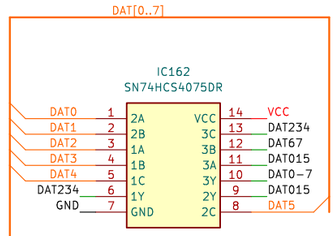

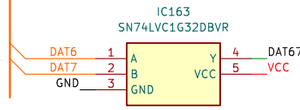

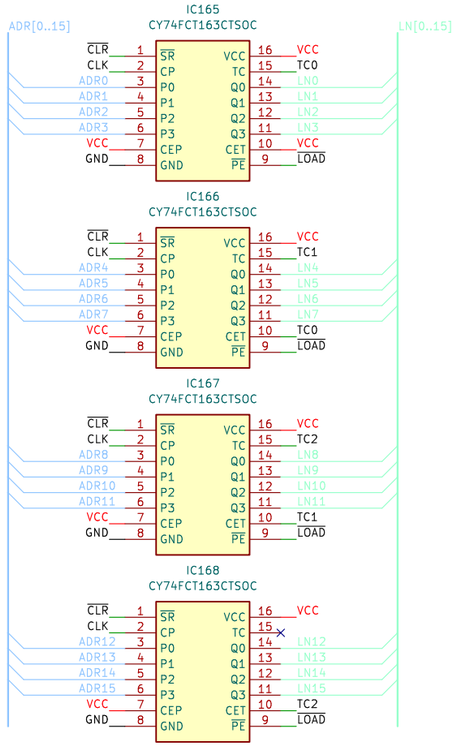

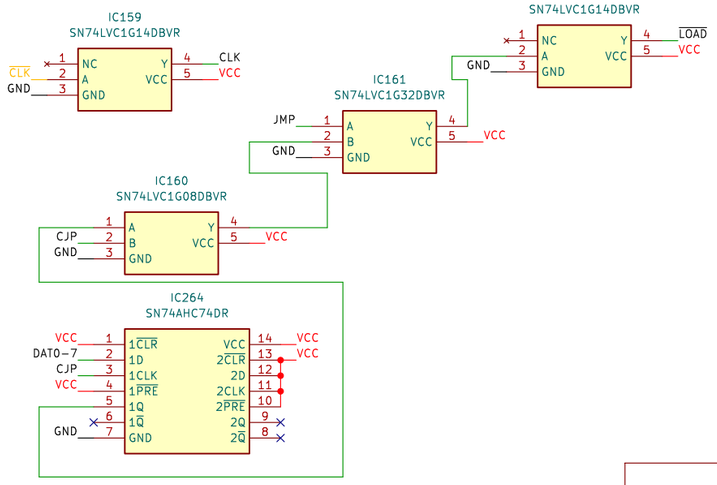

Sheet: /ProgrammeCounter/
File: ProgrammeCounter.kicad_sch

Title:

Size: A3	Date:	Rev:
KiCad E.D.A. 9.0.5		Id: 14/20

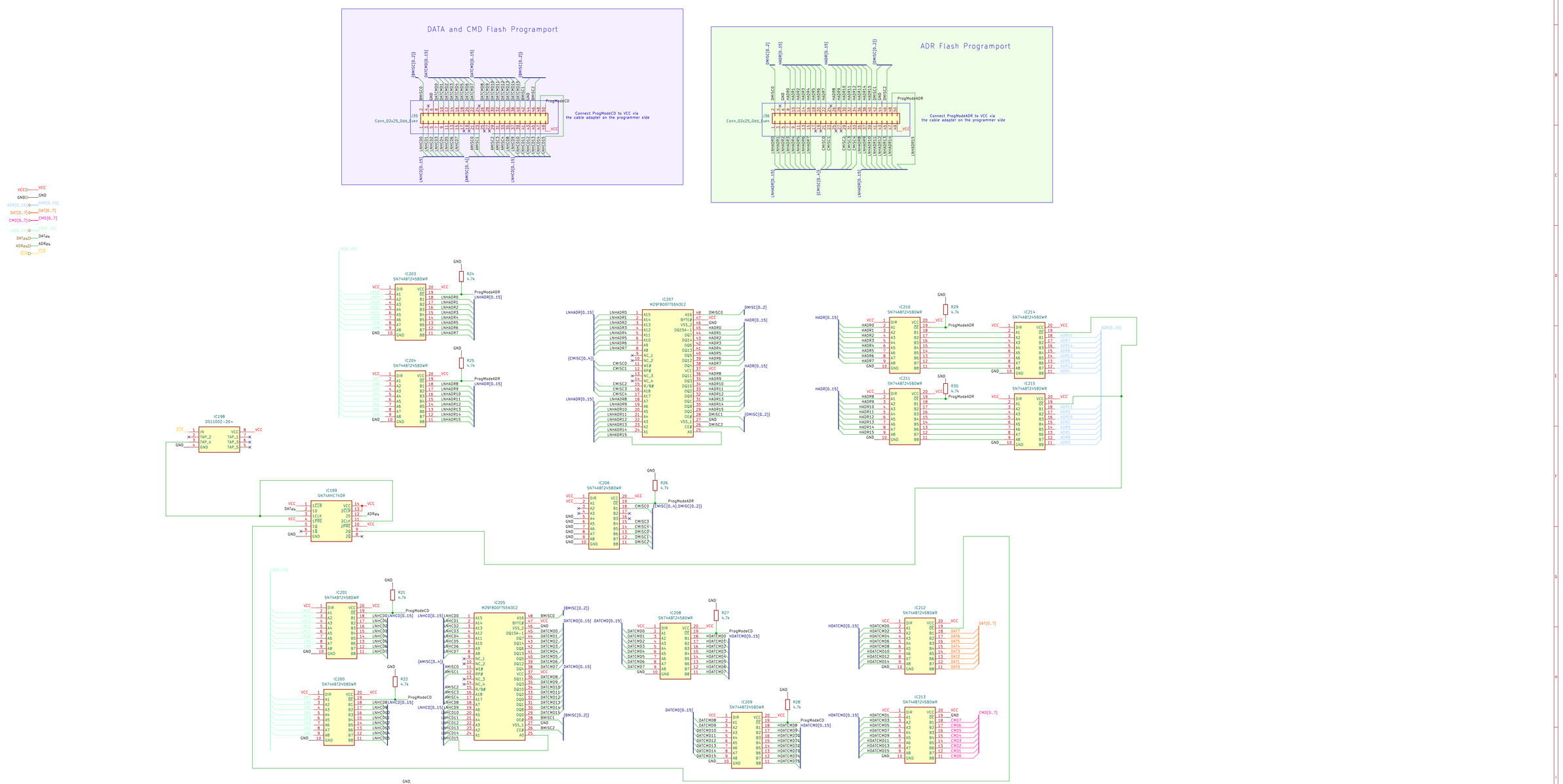

Sheet: /FlashMemory/
File: FlashMemory.kicad_sch

Title:

Size: A1	Date:	Rev:
KiCad E.D.A. 9.0.5		Id: 17/20

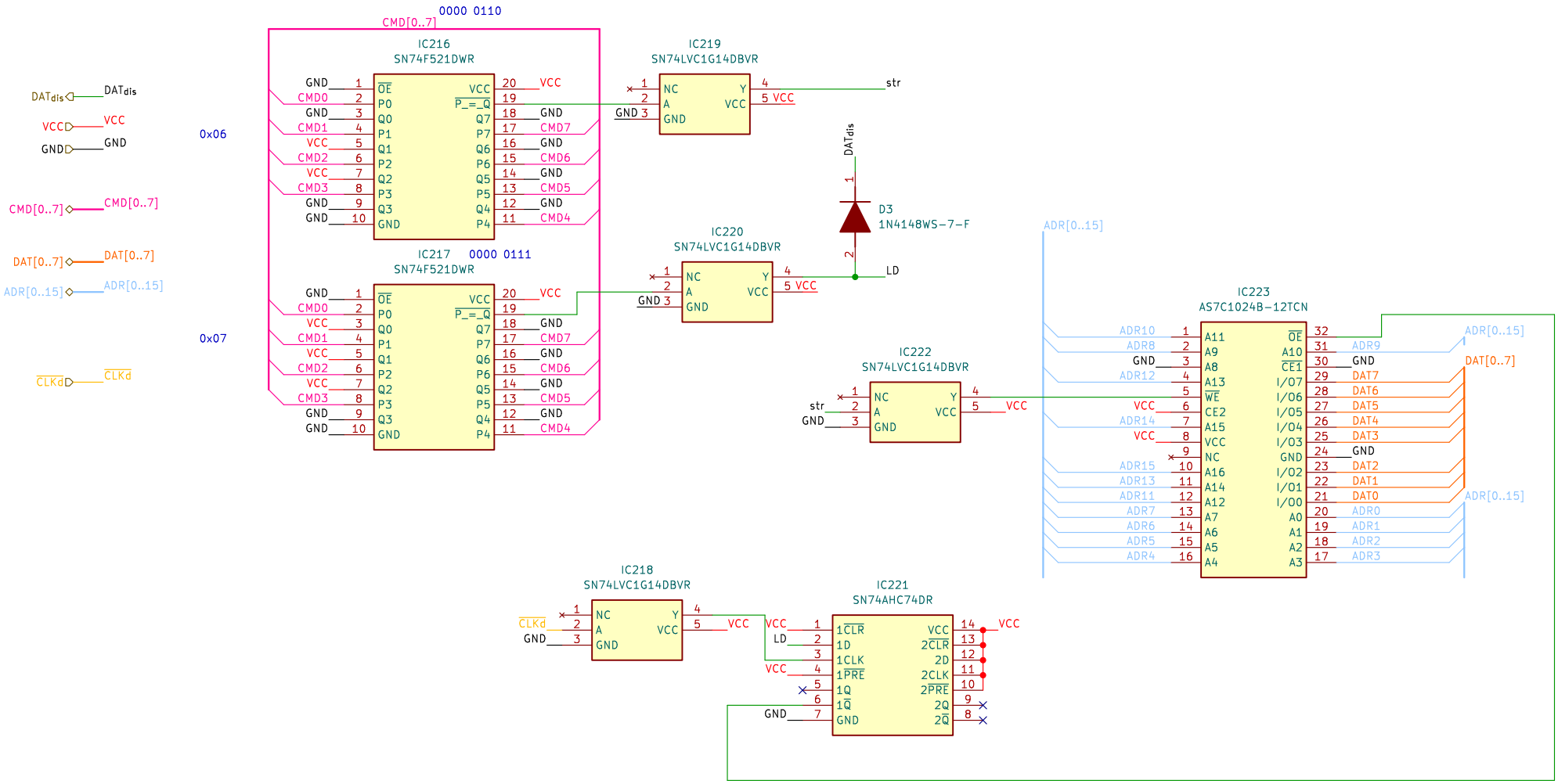

Sheet: /RAM/
File: RAM.kicad_sch

Title:

Size: A4	Date:	Rev:
KiCad E.D.A. 9.0.5		Id: 18/20

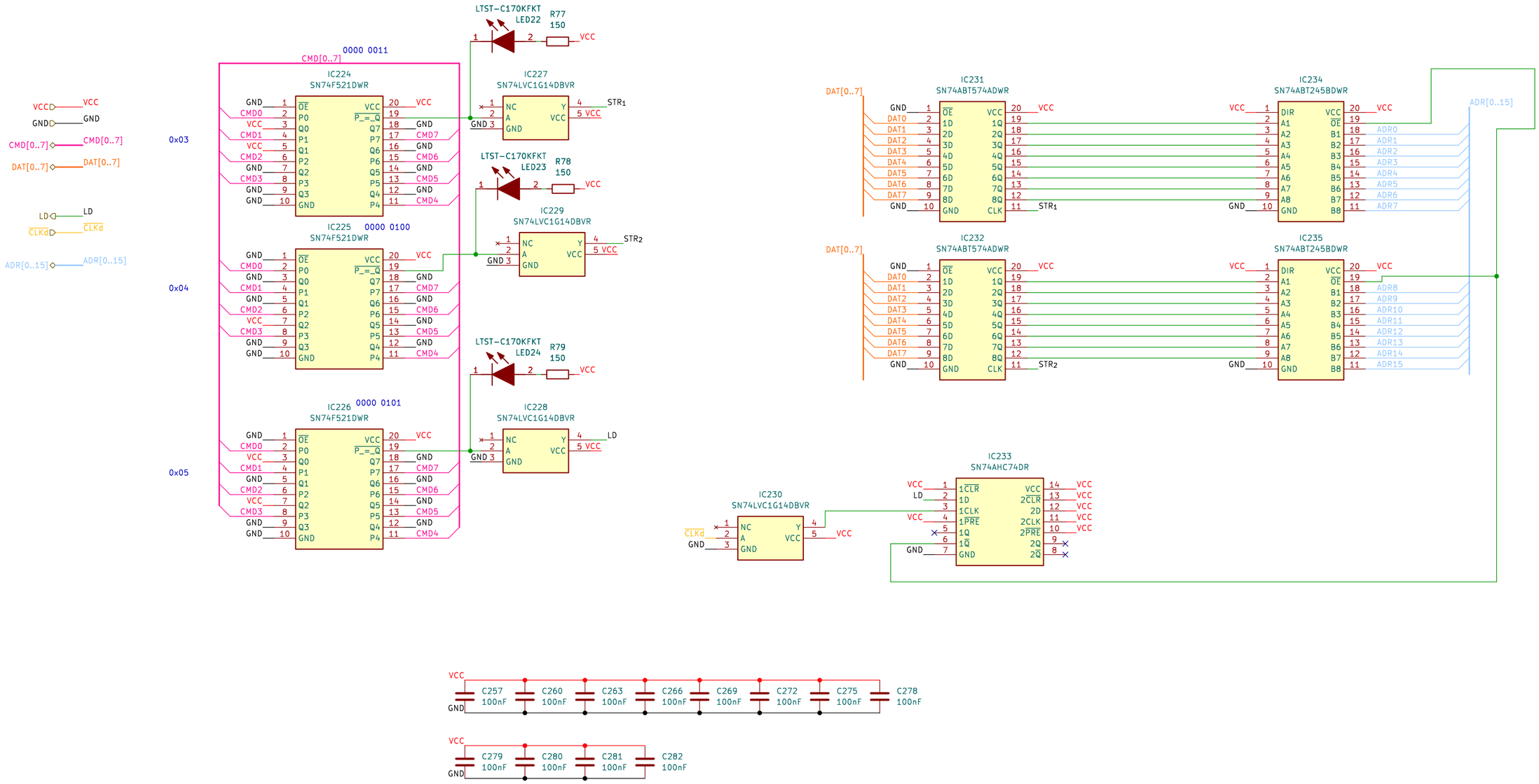

Sheet: /DATtoADR/
File: DATtoADR.kicad_sch

Title:

Size: A3	Date:	Rev:
KiCad E.D.A. 9.0.5		Id: 19/20

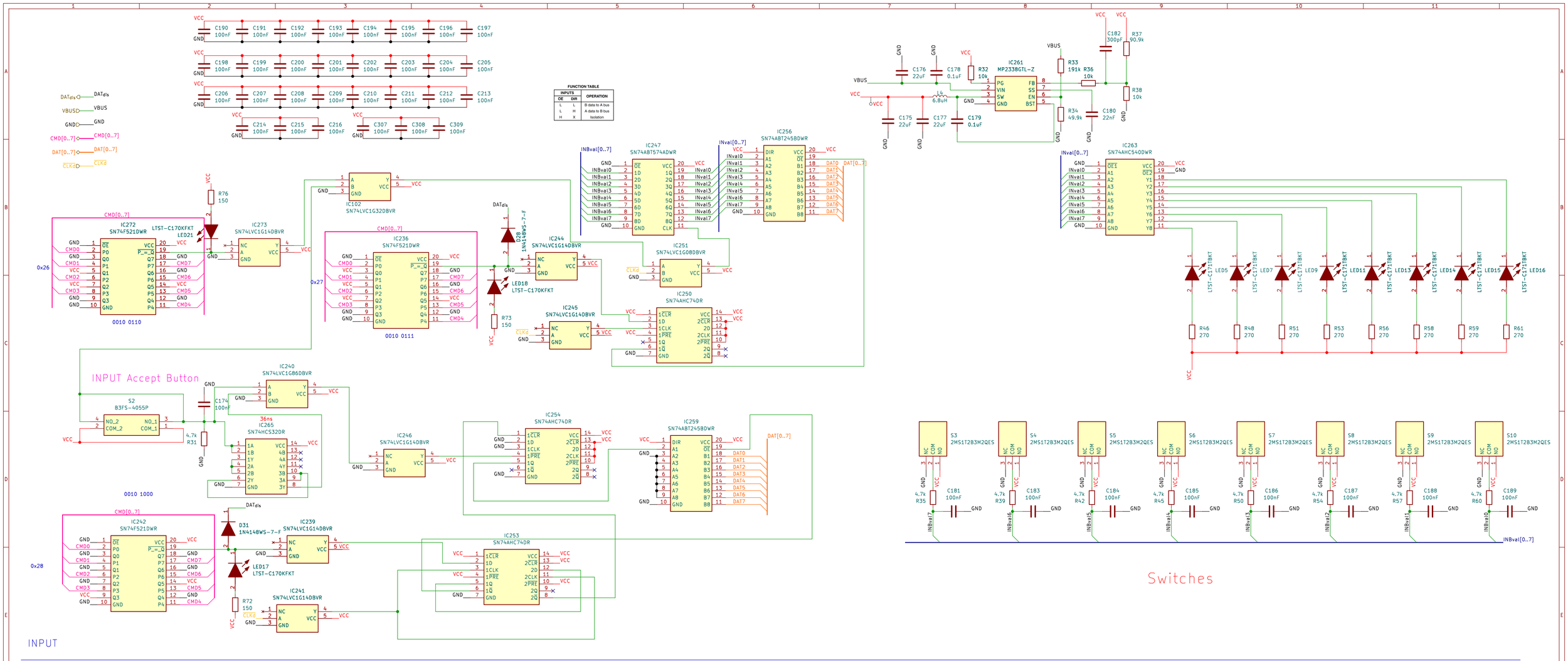

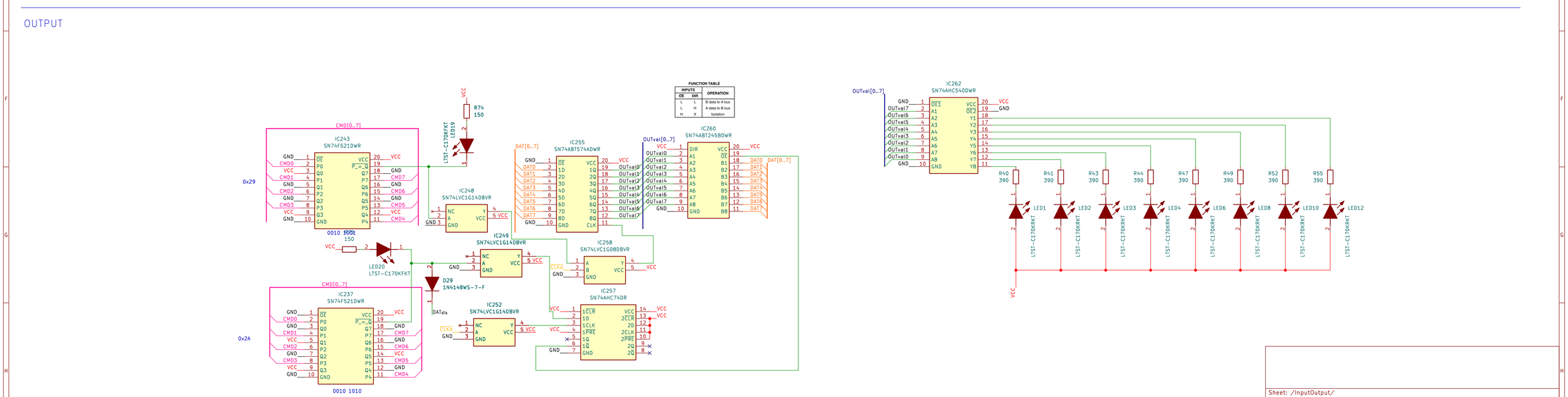

Sheet: /InputOutput/		
File: InputOutput.kicad_sch		
Title:		
Size: A2	Date:	**Rev:**
KiCad E.D.A. 9.0.5		Id: 20/20